Basic Ejectors SBP-HV/HF

Suction rate up to 309 l/min

UNIVERSAL

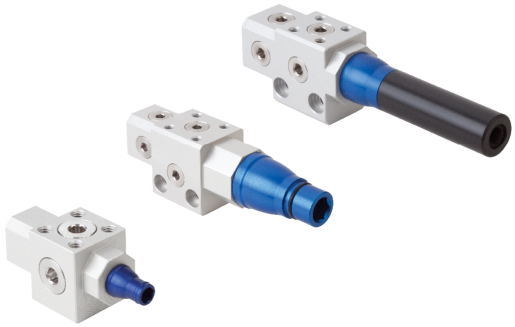

Basic Ejectors SBP-HV/HF

Suitability for industry specific applications

Application

- Basic ejectors SBP-HV/HF for universal application in vacuum systems
- Integrated ejector module for energy efficient vacuum generation because of eco nozzle technology

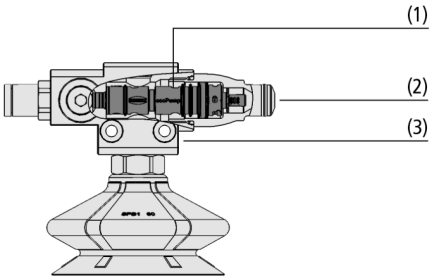

System design Basic Ejectors SBP-HV/HF

Design

- Lightweight, compact, integrated plastic ejector module (1)
- Available in three performance classes and two variants: optimized air consumption for airtight (HV) or porous (HF) materials (3)
- Assemblies available with and without silencer (2)

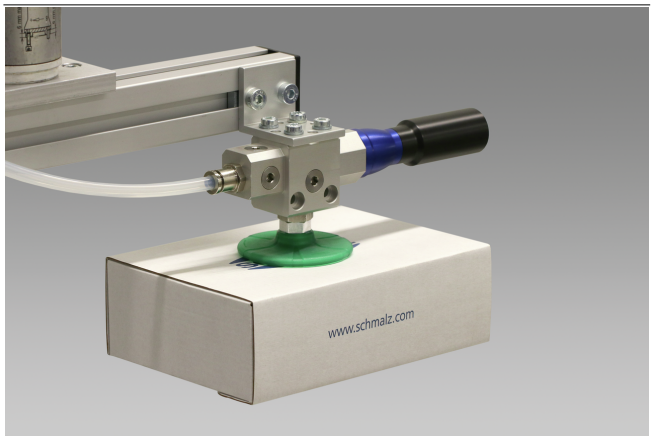

Basic ejectors SBP-HV/HF when handling cardboard boxes

Product highlights

- Powerful but energy-efficient vacuum generation
- Air consumption optionally optimized for airtight (HV) or porous (HF) workpieces
- Working vacuum is reached very quickly, leakages are safely compensated
- Long service intervals, as insensitive to dirt; easy cleaning

© J. Schmalz GmbH / Reserve technical changes / generated on: 13.03.2025

Contact Schmalz: J. Schmalz GmbH, Johannes-Schmalz-Str. 1 • 72293 Glatten • +49 7443 2403-105 • kundencenter@schmalz.de

Basic Ejectors SBP-HV/HF

Suction rate up to 309 l/min

Designation code Basic Ejectors SBP-HV/HF

SBP	–	HF	–	2	–	06	–	13	–	SD
1		2		3		4		5		6

1 – Abbreviated designation

Code	Version
SBP	SBP

2 – Variant

Code	Type
HF	High Flow
HV	High Vacuum

3 – Nozzle technology

Code	Type
2	2 stage
3	3 stage

4 – Nozzle size

Code	Diameter in mm
03	Ø 0.3
04	Ø 0.4
06	Ø 0.6
07	Ø 0.7
13	Ø 1.3
16	Ø 1.6

5 – Hole

Code	Diameter in mm
7	Ø 7
13	Ø 13
22	Ø 22

6 – Product addition

Code	Type
SD	Silencer

The basic ejectors SBP-HV/HF is delivered as a ready-to-connect product.

Ordering data Basic Ejectors SBP-HV/HF

Type	Part no.
SBP HF 2 03 7	10.02.01.01715
SBP HF 2 06 13	10.02.01.01717
SBP HF 2 06 13 SD	10.02.01.01729
SBP HF 3 06 13	10.02.01.01720
SBP HF 3 06 13 SD	10.02.01.01732
SBP HF 2 13 22	10.02.01.01723
SBP HF 2 13 22 SD	10.02.01.01735
SBP HF 3 13 22	10.02.01.01726
SBP HF 3 13 22 SD	10.02.01.01738

Type	Part no.
SBP HV 2 04 7	10.02.01.01716
SBP HV 2 07 13	10.02.01.01718
SBP HV 2 07 13 SD	10.02.01.01730
SBP HV 3 07 13	10.02.01.01721
SBP HV 3 07 13 SD	10.02.01.01733
SBP HV 2 16 22	10.02.01.01724
SBP HV 2 16 22 SD	10.02.01.01736
SBP HV 3 16 22	10.02.01.01727
SBP HV 3 16 22 SD	10.02.01.01739

Type	Part no.*
SBP HV 2 07 13 S	10.02.01.01719
SBP HV 2 07 13 S SD	10.02.01.01731
SBP HV 3 07 13 S	10.02.01.01722
SBP HV 3 07 13 S SD	10.02.01.01734
SBP HV 2 16 22 S	10.02.01.01725
SBP HV 2 16 22 S SD	10.02.01.01737
SBP HV 3 16 22 S	10.02.01.01728
SBP HV 3 16 22 S SD	10.02.01.01740

*Maintenance of the vacuum for airtight pieces using additional safety non-return valve. An active blow off impulse is requiered for release.

Contact Schmalz: J. Schmalz GmbH, Johannes-Schmalz-Str. 1 • 72293 Glatten • +49 7443 2403-105 • kundencenter@schmalz.de

Basic Ejectors SBP-HV/HF

Suction rate up to 309 l/min

Technical data Basic Ejectors SBP-HV/HF

Type	Operating temperature [°C]	Degree of evacuation [%]	Recommended hose internal diameter compressed air [mm]	Recommended hose internal diameter vacuum [mm]	Pressure range (operating pressure) [bar]	Sound pressure level free [dB(A)]	Sound pressure level suction [dB(A)]	Weight [g]
SBP HF 2 03 7	0 ... 60 °C	55	2	4	2.0 - 6.0 bar	63	54	29
SBP HF 2 06 13	0 ... 60 °C	70	4	6	2.0 ... 6.0 bar	70	58	85
SBP HF 2 06 13 SD	0 ... 60 °C	70	4	6	2.0 ... 6.0 bar	67	56	91
SBP HF 3 06 13	0 ... 60 °C	70	4	6	2.0 ... 6.0 bar	68	57	90
SBP HF 3 06 13 SD	0 ... 60 °C	70	4	6	2.0 ... 6.0 bar	63	55	96
SBP HF 2 13 22	0 ... 60 °C	61	6	12	2.0 ... 6.0 bar	84	75	262
SBP HF 2 13 22 SD	0 ... 60 °C	61	6	12	2.0 ... 6.0 bar	76	63	277
SBP HF 3 13 22	0 ... 60 °C	61	6	12	2.0 ... 6.0 bar	81	73	280
SBP HF 3 13 22 SD	0 ... 60 °C	61	6	12	2.0 ... 6.0 bar	69	61	295
SBP HV 2 04 7	0 ... 60 °C	79	2	4	2.0 ... 6.0 bar	65	57	29
SBP HV 2 07 13	0 ... 60 °C	85	4	6	2.0 ... 6.0 bar	72	62	85
SBP HV 2 07 13 SD	0 ... 60 °C	85	4	6	2.0 ... 6.0 bar	68	57	91
SBP HV 3 07 13	0 ... 60 °C	85	4	6	2.0 ... 6.0 bar	70	61	90
SBP HV 3 07 13 SD	0 ... 60 °C	85	4	6	2.0 ... 6.0 bar	64	58	96
SBP HV 2 16 22	0 ... 60 °C	90	6	12	2.0 ... 6.0 bar	87	76	262
SBP HV 2 16 22 SD	0 ... 60 °C	90	6	12	2.0 ... 6.0 bar	77	63	277
SBP HV 3 16 22	0 ... 60 °C	90	6	12	2.0 ... 6.0 bar	80	72	280
SBP HV 3 16 22 SD	0 ... 60 °C	90	6	12	2.0 ... 6.0 bar	70	63	295
SBP HV 2 07 13 S	0 ... 60 °C	85	4	6	2.0 ... 6.0 bar	72	62	85
SBP HV 2 07 13 S SD	0 ... 60 °C	85	4	6	2.0 ... 6.0 bar	68	57	91
SBP HV 3 07 13 S	0 ... 60 °C	85	4	6	2.0 ... 6.0 bar	70	61	90
SBP HV 3 07 13 S SD	0 ... 60 °C	85	4	6	2.0 ... 6.0 bar	64	58	96
SBP HV 3 16 22 S	0 ... 60 °C	90	6	12	2.0 ... 6.0 bar	80	72	280
SBP HV 2 16 22 S SD	0 ... 60 °C	90	6	12	2.0 ... 6.0 bar	77	63	277
SBP HV 2 16 22 S	0 ... 60 °C	90	6	12	2.0 ... 6.0 bar	87	76	262
SBP HV 3 16 22 S SD	0 ... 60 °C	90	6	12	2.0 ... 6.0 bar	70	63	295

Contact Schmalz: J. Schmalz GmbH, Johannes-Schmalz-Str. 1 • 72293 Glatten • +49 7443 2403-105 • kundencenter@schmalz.de

Basic Ejectors SBP-HV/HF

Suction rate up to 309 l/min

Performance data Basic Ejectors SBP-HV/HF

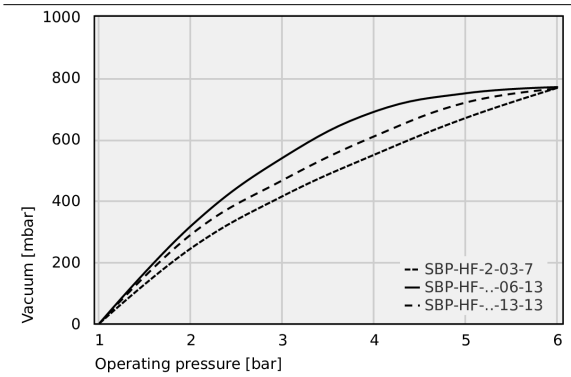

Achievable vacuum at various operating pressures

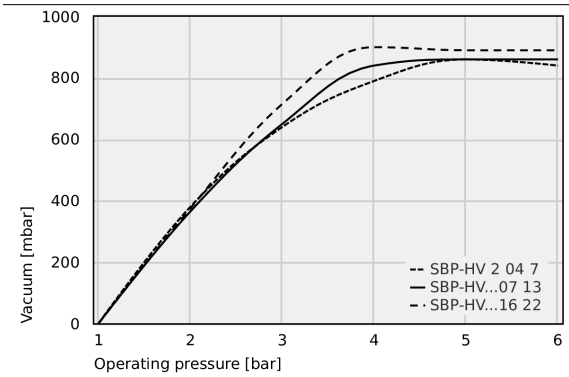

Achievable vacuum at various operating pressures

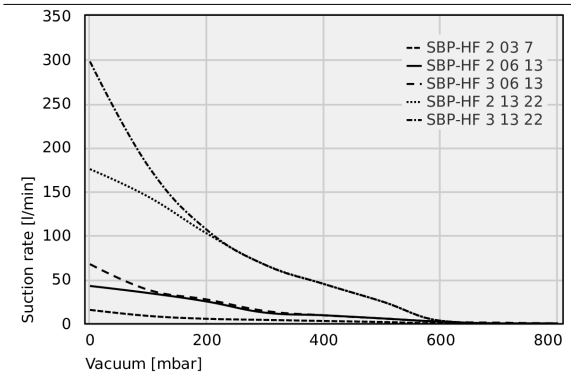

Suction rate at various degrees of evacuation [l/min]

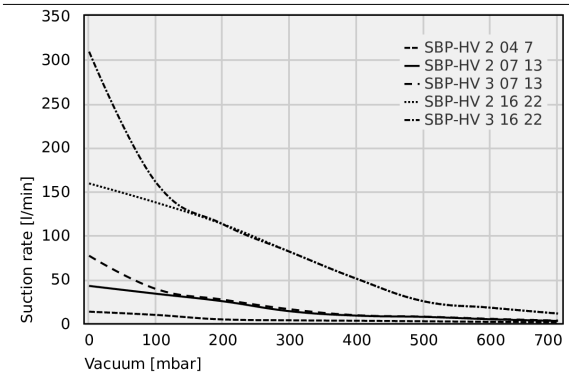

Suction rate at various degrees of evacuation [l/min]

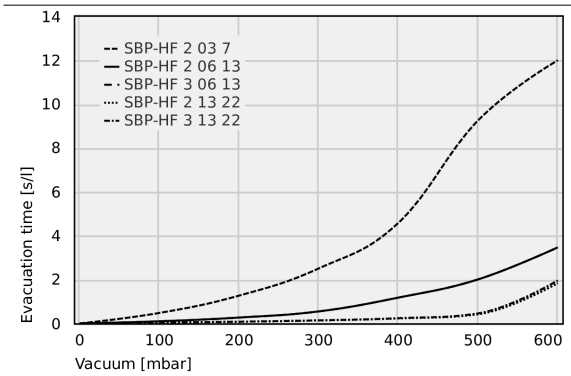

Evacuation time for various vacuum ranges [s/l]

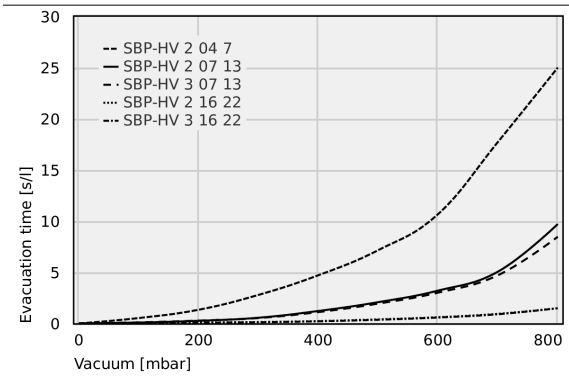

Evacuation time for various vacuum ranges [s/l]

Contact Schmalz: J. Schmalz GmbH, Johannes-Schmalz-Str. 1 • 72293 Glatten • +49 7443 2403-105 • kundencenter@schmalz.de

Basic Ejectors SBP-HV/HF

Suction rate up to 309 l/min

Achievable vacuum at various operating pressures

	1	2	3	4	5	6
SBP-HF-2-03-7	0.0	245	415	550	670	768
SBP-HF-..-06-13	-	318	540	690	750	770
SBP-HF-..-13-22	-	290	467	610	720	765

	1	2	3	4	5	6
SBP-HV 2 04 7	-	380	640	790	860	840
SBP-HV...07 13	-	365	650	840	860	860
SBP-HV...16 22	-	375	715	900	890	890

Suction rate at various degrees of evacuation [l/min]

	0	100	200	300	400	500	600	700	800
SBP-HF 2 03 7	15.25	8.38	5.13	3.88	2.63	1.5	-	-	-
SBP-HF 2 06 13	42.44	34.39	24.73	12.08	9.09	5.52	1.84	-	-
SBP-HF 3 06 13	67.28	38	27.03	14.00	9.09	5.52	1.84	0.69	-
SBP-HF 2 13 22	175.26	143.8	102	66.33	44.67	24.67	2.88	-	-
SBP-HF 3 13 22	297.6	178.3	106.1	66.3	44.7	24.7	2.9	-	-

	0	100	200	300	400	500	600	700
SBP-HV 2 04 7	13.2	9.5	4.4	3.4	2.9	2.3	1.7	1.2
SBP-HV 2 07 13	42.5	33.6	25.0	13.7	8.7	7.3	4.6	2.7
SBP-HV 3 07 13	76.8	39	26.9	16	9.2	7.6	5.1	3.1
SBP-HV 2 16 22	159.0	137.3	112.6	81.2	50.5	25	17.7	11.1
SBP-HV 3 16 22	308.8	160	112.6	81.2	50.5	25	17.7	11.1

Evacuation time for various vacuum ranges [s/l]

	0	100	200	300	400	500	600
SBP-HF 2 03 7	-	0.48	1.27	2.51	4.59	9.26	12
SBP-HF 2 06 13	-	0.1	0.27	0.55	1.18	2.01	3.47
SBP-HF 3 06 13	-	0.1	0.27	0.55	1.18	2.01	3.47
SBP-HF 2 13 22	-	0.04	0.08	0.14	0.23	0.42	1.84
SBP-HF 3 13 22	-	0.04	0.08	0.14	0.24	0.46	1.96

	0	100	200	300	400	500	600	700	800
SBP-HV 2 04 7	-	0.53	1.34	2.79	4.71	7.16	10.68	17.73	25
SBP-HV 2 07 13	-	0.09	0.26	0.56	1.22	2.08	3.21	5.06	9.71
SBP-HV 3 07 13	-	0.11	0.28	0.53	1.11	1.94	3.01	4.71	8.47
SBP-HV 2 16 22	-	0.06	0.09	0.14	0.23	0.4	0.61	0.94	1.49
SBP-HV 3 16 22	-	0.04	0.08	0.12	0.21	0.36	0.58	0.90	1.49

Contact Schmalz: J. Schmalz GmbH, Johannes-Schmalz-Str. 1 • 72293 Glatten • +49 7443 2403-105 • kundencenter@schmalz.de

Basic Ejectors SBP-HV/HF

Suction rate up to 309 l/min

Design data Basic Ejectors SBP-HV/HF

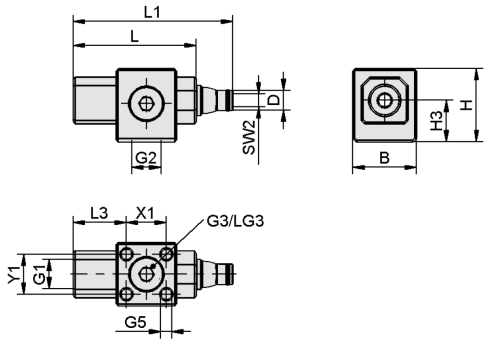

SBP 2 03, 2 04

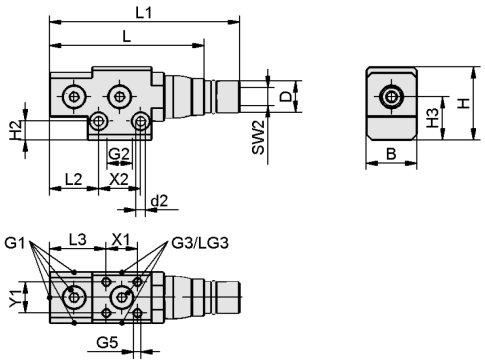

SBP 2 13, 3 13, 2 22, 3 22

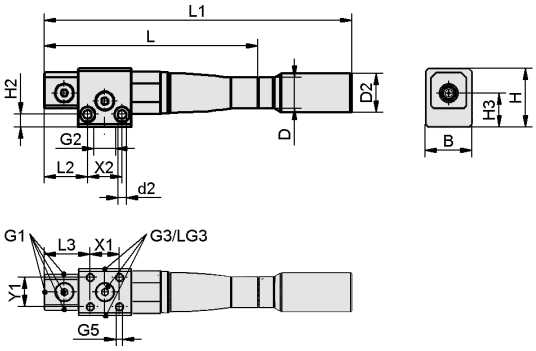

SBP SD

Contact Schmalz: J. Schmalz GmbH, Johannes-Schmalz-Str. 1 • 72293 Glatten • +49 7443 2403-105 • kundencenter@schmalz.de

Basic Ejectors SBP-HV/HF

Suction rate up to 309 l/min

Design data Basic Ejectors SBP-HV/HF

Type	B [mm]	D [mm]	d2 [mm]	G1	G2			H [mm]	H2 [mm]	H3 [mm]	L [mm]	L1 [mm]	L2 [mm]	L3 [mm]	SW2 [mm]	X1 [mm]	X2 [mm]	Y1 [mm]
SBP HF 2 03 7	19	6.0	-	G1/8"-F	G1/8"-F	G1/8"-F	M4-F	22	-	12.5	37.0	48	-	16.0	4	12	-	12
SBP HF 2 06 13	23	14.2	4.2	G1/8"-F	G1/4"-F	G1/8"-F	M4-F	33	8.5	19.5	69.5	86	22.0	25.5	8	14	19	14
SBP HF 2 06 13 SD	23	16.5	4.2	G1/8"-F	G1/4"-F	G1/8"-F	M4-F	33	8.5	19.5	69.5	121	22.0	25.5	-	14	19	14
SBP HF 3 06 13	23	14.2	4.2	G1/8"-F	G1/4"-F	G1/8"-F	M4-F	33	8.5	19.5	88.0	104	22.0	25.5	8	14	19	14
SBP HF 3 06 13 SD	23	16.5	4.2	G1/8"-F	G1/4"-F	G1/8"-F	M4-F	33	8.5	19.5	88.0	140	22.0	25.5	-	14	19	14
SBP HF 2 13 22	35	20.0	6.4	G1/4"-F	G3/8"-F	G1/4"-F	M6-F	44	9.5	25.5	120.5	139	32.5	34.5	12	22	26	22
SBP HF 2 13 22 SD	35	23.0	6.4	G1/4"-F	G3/8"-F	G1/4"-F	M6-F	44	9.5	25.5	120.5	191	32.5	34.5	-	22	26	22
SBP HF 3 13 22	35	20.0	6.4	G1/4"-F	G3/8"-F	G1/4"-F	M6-F	44	9.5	25.5	160.5	179	32.5	34.5	14	22	26	22
SBP HF 3 13 22 SD	35	23.0	6.4	G1/4"-F	G3/8"-F	G1/4"-F	M6-F	44	9.5	25.5	160.5	231	32.5	34.5	-	22	26	22

Contact Schmalz: J. Schmalz GmbH, Johannes-Schmalz-Str. 1 • 72293 Glatten • +49 7443 2403-105 • kundencenter@schmalz.de